ZF5HP19FL / ZF5HP19FLA (Audi / VW)

FWD/AWD 5 Speed

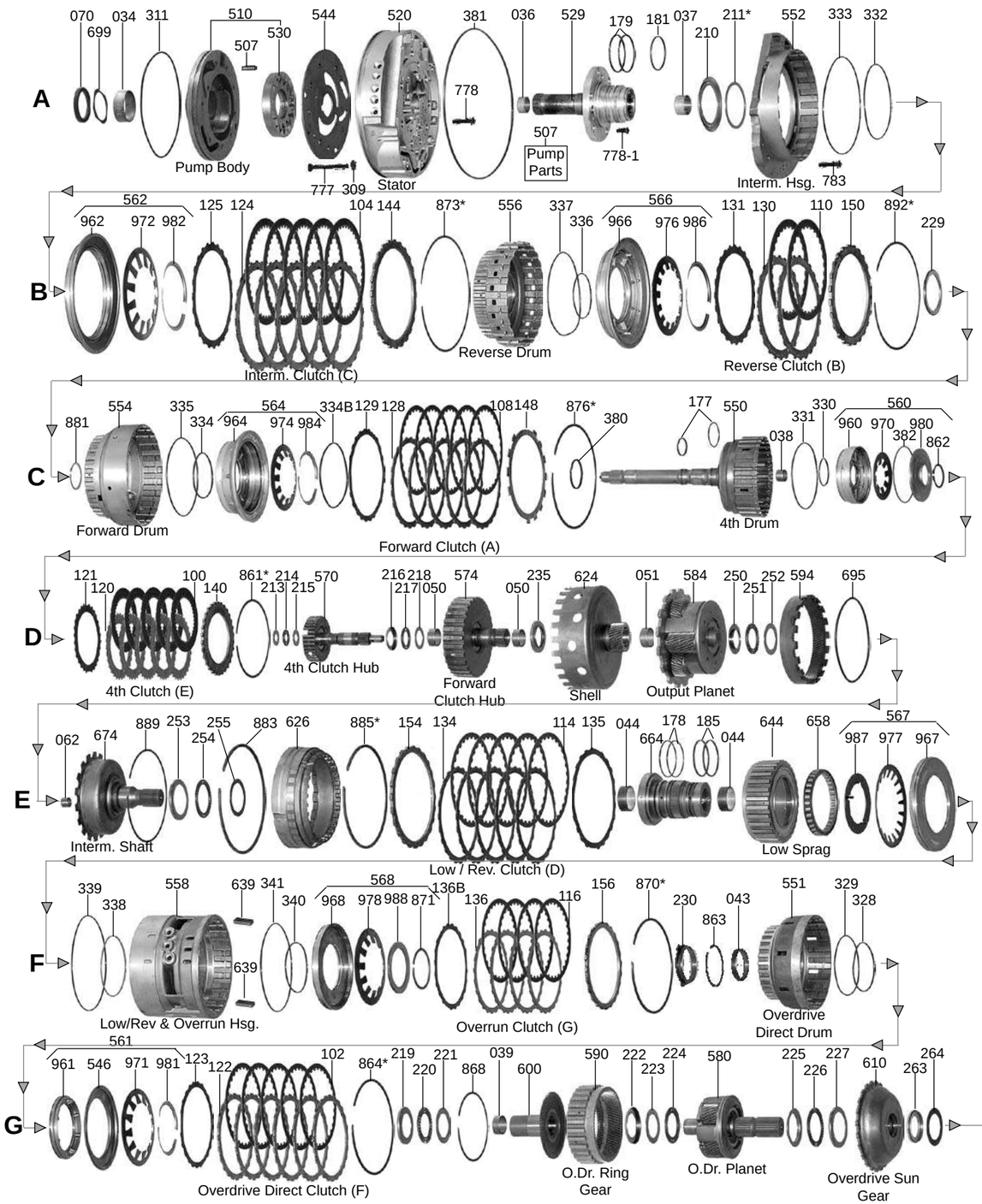

© Makco Distributing, Inc.

FWD/AWD 5 Speed ZF5HP19FL / ZF5HP19FLA (Audi / VW)

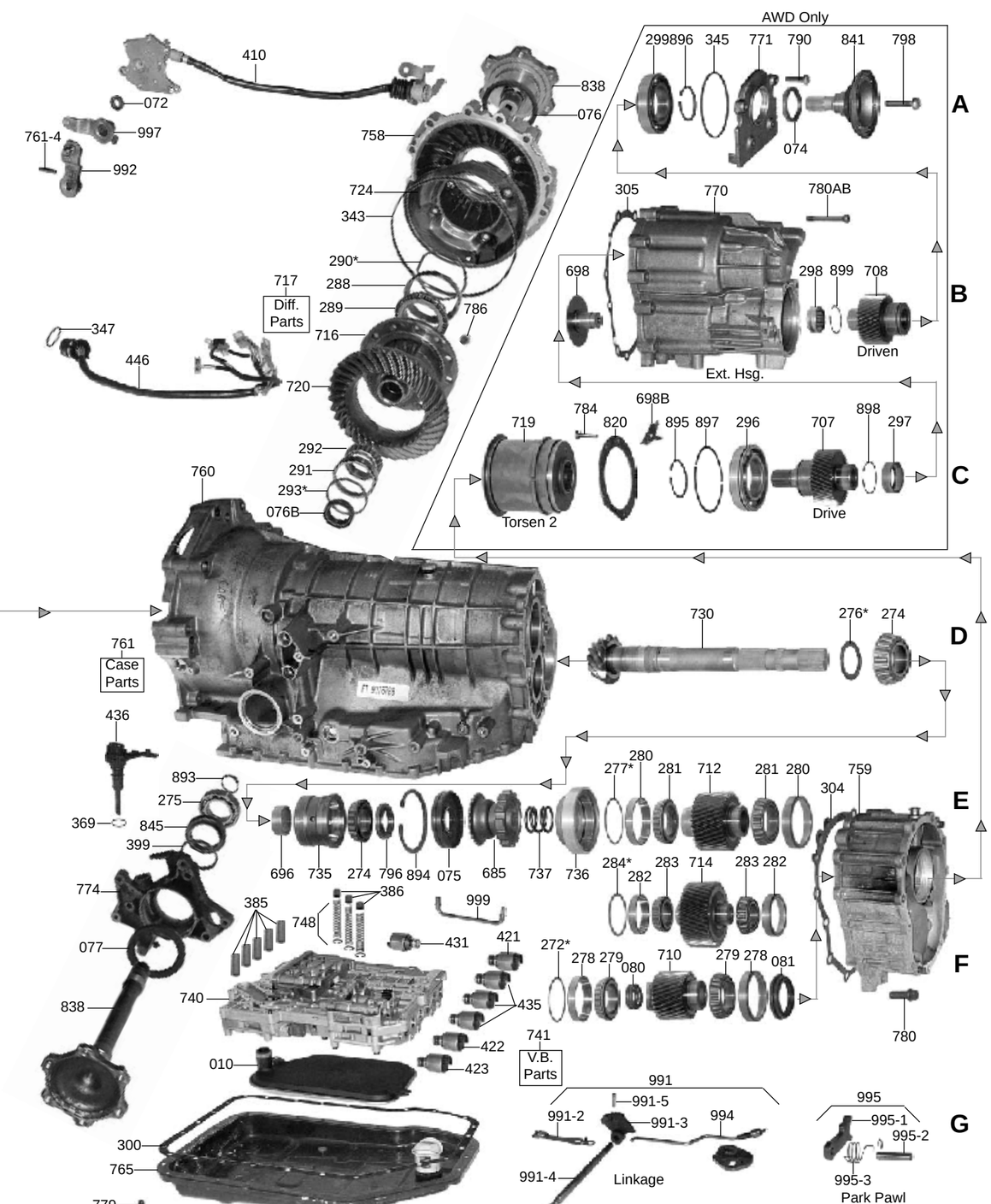

© Makco Distributing, Inc.